CITY OF COLUMBUS
STANDARD SPECIFICATIONS FOR
ROADWAY CONSTRUCTION

This Appendix to Chapter 8 of the City Code consists of the following:

1. A copy of City Council Policy No. 09-03 the Standard Specifications for New Roadway Construction dated June 10, 2009, the most recent policy amending the Standard Specifications, including:

    - The text of Policy 09-03, the Standard Specifications {a title page, five pages of text and 9 pages of drawings} as prepared by Toltz, King, Duval, Anderson and Associates, Incorporated.
    - Drawing 100, "RURAL RESIDENTIAL STREET," dated June, 2009.
    - Drawing 101, "ALTERNATIVE RURAL RESIDENTIAL STREET," dated June, 2009.
    - Drawing 102, "TYPICAL COMMERCIAL STREET," dated June, 2009.
    - Drawing 103, "TYPICAL UTILITES PLACEMENT," dated June, 2009.
    - Drawing 104, "TYPICAL PERMANENT TURN AROUND," dated June, 2009.
    - Drawing 105, "TYPICAL TEMPORARY TURN AROUND," dated June, 2009.
    - Drawing 200, "CATCH BASIN, TYPE 404", dated June, 2009
    - Drawing 201, "CATCH BASIN, TYPE 402", dated June, 2009
    - Drawing 202, "CATCH BASIN/MANHOLE, TYPE 406", dated June, 2009

[Appendix A. to Chapter 8 amended by Ord. No. 07-02, effective March 1, 20067, and amended by Policy. No. 09-03, effective June 10, 2009.]

STANDARD SPECIFICATIONS

FOR NEW ROADWAY CONSTRUCTION

Policy 09-03

CITY OF COLUMBUS, MINNESOTA

JUNE 10, 2009

History:
Revisions dated January 14, 1986, adopted by Resolution 86-1, dated January 22, 1986.
Revisions dated April 21, 1987, adopted by Resolution 87-5, dated May 27, 1987.
Revisions dated November 1, 1988, adopted by Resolution 88-9, dated November 9, 1988.
Revisions dated August 9th, 1989, adopted by Resolution 89-11, dated August 9, 1989.
Revisions dated August 12, 1992, adopted by Resolution 92-11, dated August 12, 1992.

I. STANDARD SPECIFICATIONS

The standard construction specifications referred to herein shall be the latest edition of the MnDOT Standard Specifications for Highway Construction.

II. SPECIAL PROVISIONS

A. Construction Requirements

1. Prior to the start of any construction activity, the Developer shall schedule a preconstruction conference with the following persons in attendance:

   a. Developer

   b. Developer's Engineer/Surveyor

   c. Developer's Contractor

   d. City Engineer

   e. City Public Works Superintendent and City Administrator

2. Construction staking shall be done by the Developer's Engineer and shall conform in all respects to the approved plans and/or City Standards.

3. The Developer is required to have certain phases of construction inspected by the City Engineer prior to proceeding to the next phase. Construction staking shall be provided for use by the City Engineer during inspection of the street construction.

   Construction not inspected will not be accepted and the Developer will be required, at his own expense, to reconstruct the portion of construction not inspected or place a 10 year performance bond with the City in the amount equal to the estimated cost of repairs. The Developer shall notify the City Engineer at least 48 hours in advance for inspection of the proposed roadway at each of the following times.

   a. When all necessary topsoil and unsuitable material has been removed from the subbase. The City Engineer reserves the right to require soil borings, compaction tests or test rolling, at the expense of the developer, to verify that all unsuitable material has been removed.

b. When subbase has been graded to + or - 0.10 feet of the lines and grades established in the approved plans. Construction stakes must be in place for use during inspection.

c. When base course Class 5 gravel has been placed and graded to + or - 0.10 feet of the lines and grades established by the approved plans. Construction stakes must be in place for use during inspection.

d. During placement of bituminous base and wearing courses.

e. For final inspection of the completed roadway.

4. The Developer shall take samples of Class 5 gravel and have sieve analysis run to determine compliance with the specifications. Maximum sample rate is one per 500 tons, minimum two per roadway. Satisfactory test results, indicating compliance with gravel specifications, must be received before proceeding with the next phase of construction.

5. Compaction shall be by the ordinary compaction method. However, the City reserves the right to order compaction tests taken in both the subbase and the base materials if, in the opinion of the Engineer, there appears to be insufficient compaction. Compaction tests shall be by the specified density method. Maximum test rate is one compaction test per 500 foot section of roadway in each of the subbase and base. Satisfactory test results, indicating compliance with compaction specifications, must be received before proceeding with next phase of construction.

6. The Developer shall construct all roadways to the section as shown on the drawings attached to these specifications.

7. Ditch bottoms and slopes shall be finished with three inches of topsoil and MnDOT Spec. 3882 Type 1 mulch, two tons per acre, and shall be seeded with MnDOT Spec. 3876 mixture 260 seed, 150 lbs. per acre. Steep slopes shall be sodded as directed by the Engineer to prevent erosion.

8. The Developer shall construct a turnaround on all dead end roads. If the road may be extended in the future, a "T" turnaround may be used. See Drawing No. 105. There shall be no private entrances constructed from the turnaround or within 40 feet of the end of the roadway. If the road will not be extended in the future, a circular cul-de-sac shall be used. See Drawing No. 104.

9. The City shall maintain the road after acceptance; however, the Developer shall immediately repair or replace at his own expense any defective work caused by faulty workmanship or materials of which he is

notified during the construction period or within one year after the date of acceptance of the work, regardless of the previous approval and acceptance of the work.

The Developer will be required to provide a cash escrow or letter of credit in the name of the City in an amount set by the City Council to warranty the work for a period of one year.

10. The City Maintenance Supervisor shall order all required signs and barricades. The Developer shall provide payment for said signs and barricades within 30 days of ordering signs and barricades. The City maintenance personnel shall place all signs in accordance with the MnDOT traffic manual requirements and said costs for placement shall be paid by the Developer. The City Maintenance Supervisor shall coordinate all pavement markings required on the Project. The City Maintenance Supervisor will have the work performed and said costs for marking shall be paid by the Developer.

11. As a minimum requirement, all clearing and grubbing operations shall extend into the backslope of the ditch cross-section or to the right-of-way line for the curbed street section as shown on the standard drawings attached.

12. Bituminous surfacing shall conform in every respect to MnDOT Spec. 2360 Type LV3 for non-wear course and for wear course. Use "B" oil. compaction shall be by the specified density method. The Developer shall take one bituminous sample per 500 ton to test for asphalt content and gradation and also one core sample per 500 foot section of roadway in each layer to test for compaction.

13. The Developer must arrange for all utilities to be constructed within easements provided for that purpose as shown on Drawing 103. Upon completion of utility construction all disturbed areas shall be restored in conformance with paragraph 7. above

14. Where driveway locations are known, the Developer shall install driveway aprons to right-of-way at time of street construction. Driveways shall have a minimum 12 foot surface width and a minimum 15 foot radius with its connection the City street. Driveway culverts shall be a minimum of 24 feet long, not including aprons, for the minimum 12 foot surface width and minimum 2 foot ditch.

15. To minimize inconvenience and nuisance to existing residents, the Developer shall, at their own expense, control dust by watering or other approved means, during all street construction activity.

B. Construction Materials

1. Surfacing

Bituminous mixture for surfacing shall be MnDOT Spec. 2360 Type LV3 for non-wear course and for wear course, "B" oil with oil content as specified in the trail mix design.

2. Gravel Base

Class 5 gravel shall meet the requirements of MnDOT Spec. 3138, and may contain salvaged or recycled materials as long as the Class 5 gradation is met.

3. Culverts shall be corrugated metal pipe placed as shown on the approved plans. Minimum size shall be as directed by the City Maintenance Supervisor and in no case less than 15 inches in diameter for driveways, 24 inches in diameter for culverts crossing the roadway, and 14 gage in thickness. All culverts shall be galvanized steel and shall have aprons at each end.

4. Storm sewer pipe used with the Alternative Street Section (Dwg. 101 and 102) shall be reinforced concrete pipe. Catch basins shall be in conformance with Drawings 200, 201, and 202. All storm sewer must be inspected before it is backfilled.

C. Acceptance of the Work

1. The City reserves the right to stop construction activity if construction is not meeting the project requirements.

2. Final acceptance of the work shall be recommended by the City Engineer and the City Maintenance Supervisor to the City Council.

3. Any work considered unacceptable shall be subject to MnDOT Spec. 1512.

D. Design Considerations

1. All widths shall conform to the following minimum standards:

Classification	Min. R/W Width	Min. Roadway Width		Shoulder Width
		Rural	Urban*	
Commercial Streets	66′	-	36′	-
Collector Streets	66′	24′	32′	4′

Minor Streets	66′	24′	28′	2′
Turnarounds	As shown on Drawing No. 104 and 105			

*Measured from face of curb to face of curb.

2. When connecting street lines deflect from each other at one point by more than ten (10) degrees, they shall be connected by a curve with a radius of not less than 100 feet.

3. All centerline gradients shall be a minimum 0.5 percent and shall not exceed the following:

Classification	Gradient (in %)
Commercial Streets	4
Thoroughfares	4
Major Streets	4
Collector Streets	6
Minor Streets	6
Marginal Access Streets	6

E. Acknowledgment

I have read, understand and agree to the terms and conditions of the Standard Specifications for New Roadway construction for the City of Columbus, Minnesota. I have submitted this acknowledgment with my preliminary plat as an indication of my understanding of the roadway construction requirements.

Name Date

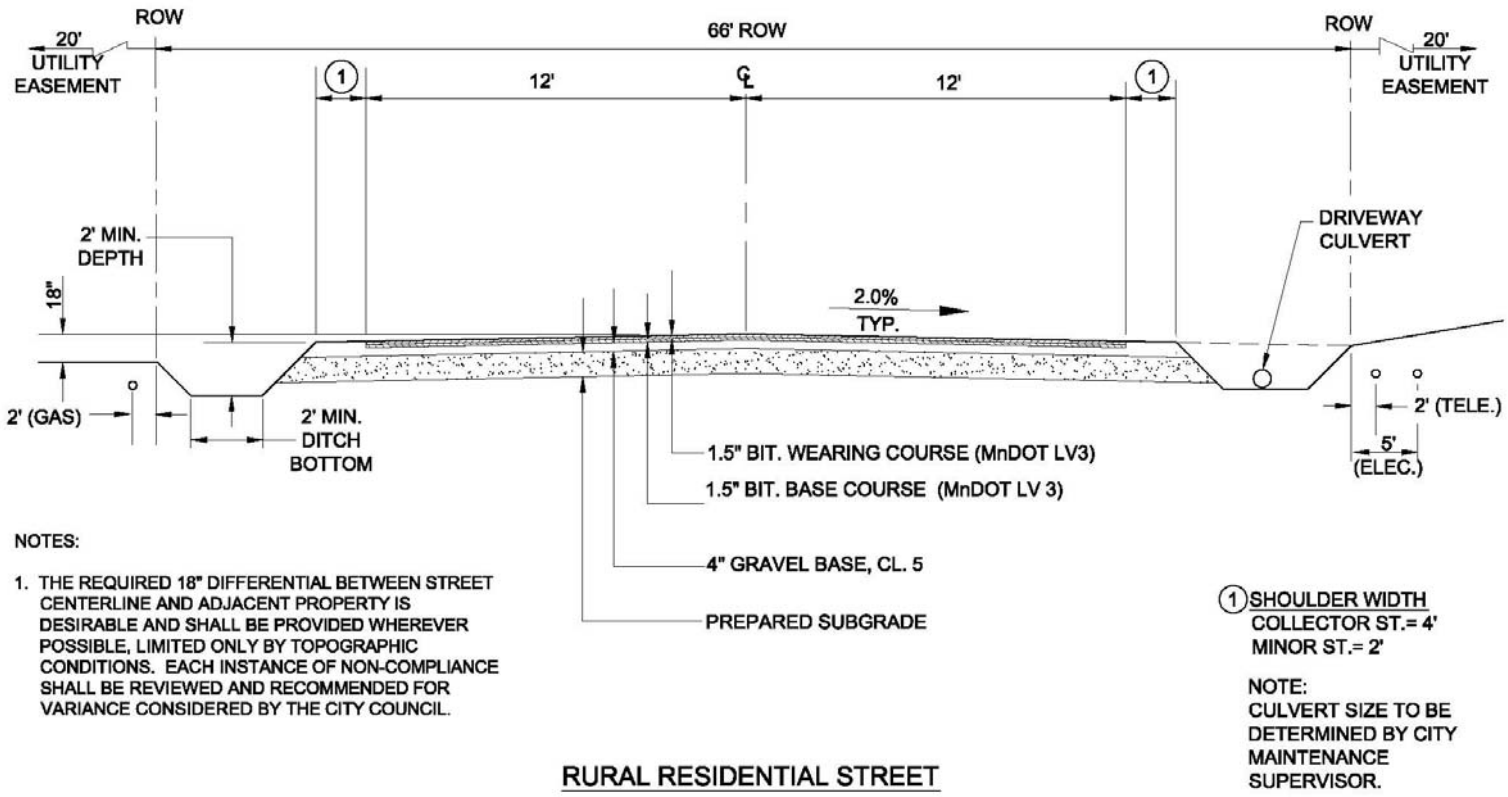

NOTES:

1. THE REQUIRED 18" DIFFERENTIAL BETWEEN STREET CENTERLINE AND ADJACENT PROPERTY IS DESIRABLE AND SHALL BE PROVIDED WHEREVER POSSIBLE, LIMITED ONLY BY TOPOGRAPHIC CONDITIONS. EACH INSTANCE OF NON-COMPLIANCE SHALL BE REVIEWED AND RECOMMENDED FOR VARIANCE CONSIDERED BY THE CITY COUNCIL.

(1) SHOULDER WIDTH
COLLECTOR ST.= 4'
MINOR ST.= 2'

NOTE:
CULVERT SIZE TO BE DETERMINED BY CITY MAINTENANCE SUPERVISOR.

RURAL RESIDENTIAL STREET

Date: June 2009

	City of Columbus STREET STANDARDS	STANDARD DRAWING NO. 100 CITY

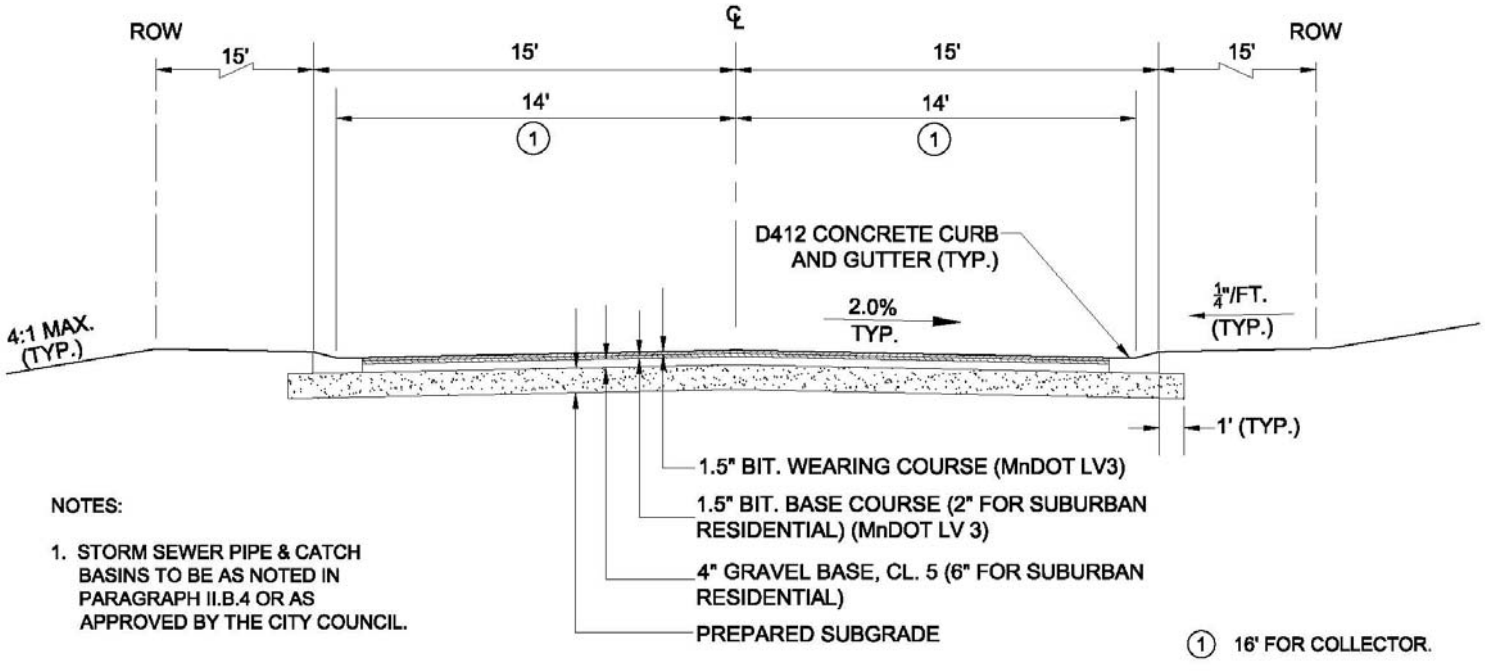

NOTES:

1. STORM SEWER PIPE & CATCH BASINS TO BE AS NOTED IN PARAGRAPH II.B.4 OR AS APPROVED BY THE CITY COUNCIL.

ALTERNATIVE
RURAL RESIDENTIAL STREET

Date: June 2009

	City of Columbus STREET STANDARDS	STANDARD DRAWING NO. 101 CITY

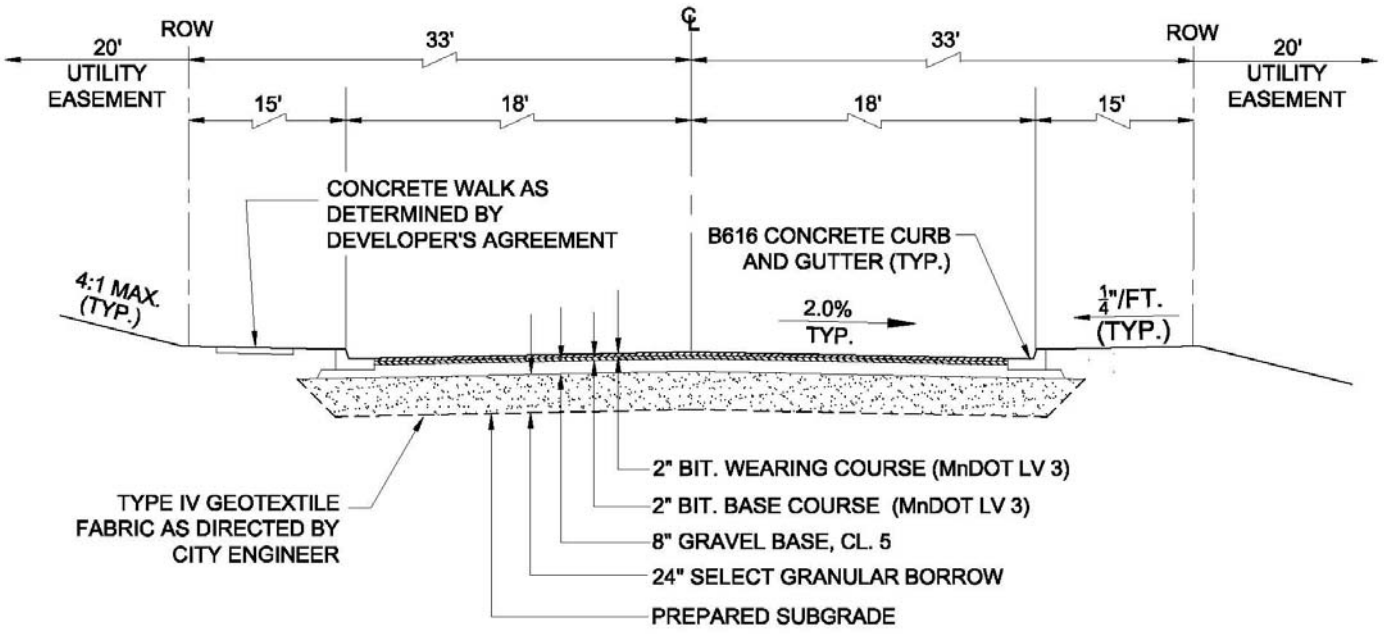

TYPICAL COMMERICAL STREET

Date: June 2009

	City of Columbus STREET STANDARDS	STANDARD DRAWING NO. 102 CITY

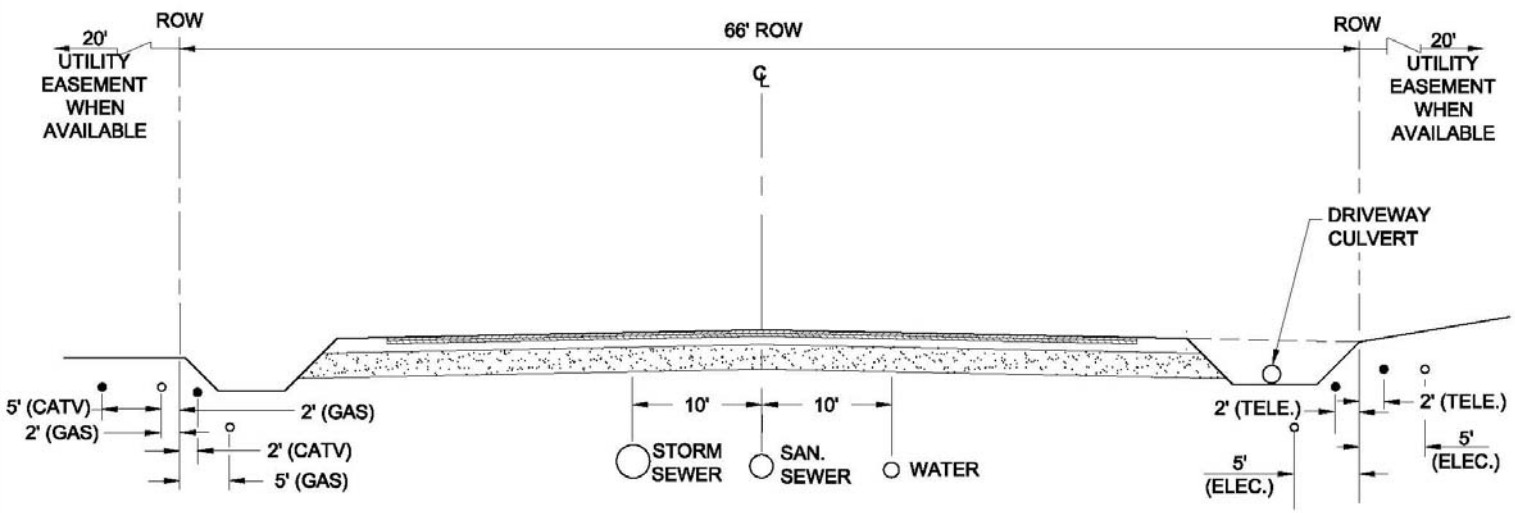

NOTE:
CULVERT SIZE TO BE DETERMINED BY CITY MAINTENANCE SUPERVISOR.

NOTES:

1. ALL PRIVATE UTILITIES TO BE INSTALLED AT 36" MIN. DEPTH.
2. A PNEUMAGOPHER SHALL BE USED TO INSTALL UTILITIES UNDER PAVED STREETS AND DRIVEWAYS; AND SHALL BE A MINIMUM 36" BELOW LOWEST POINT OF PAVED SURFACE BEING CROSSED.

TYPICAL UTILITIES PLACEMENT

Date: June 2009

City of Columbus
STREET STANDARDS

STANDARD DRAWING NO.
103
CITY

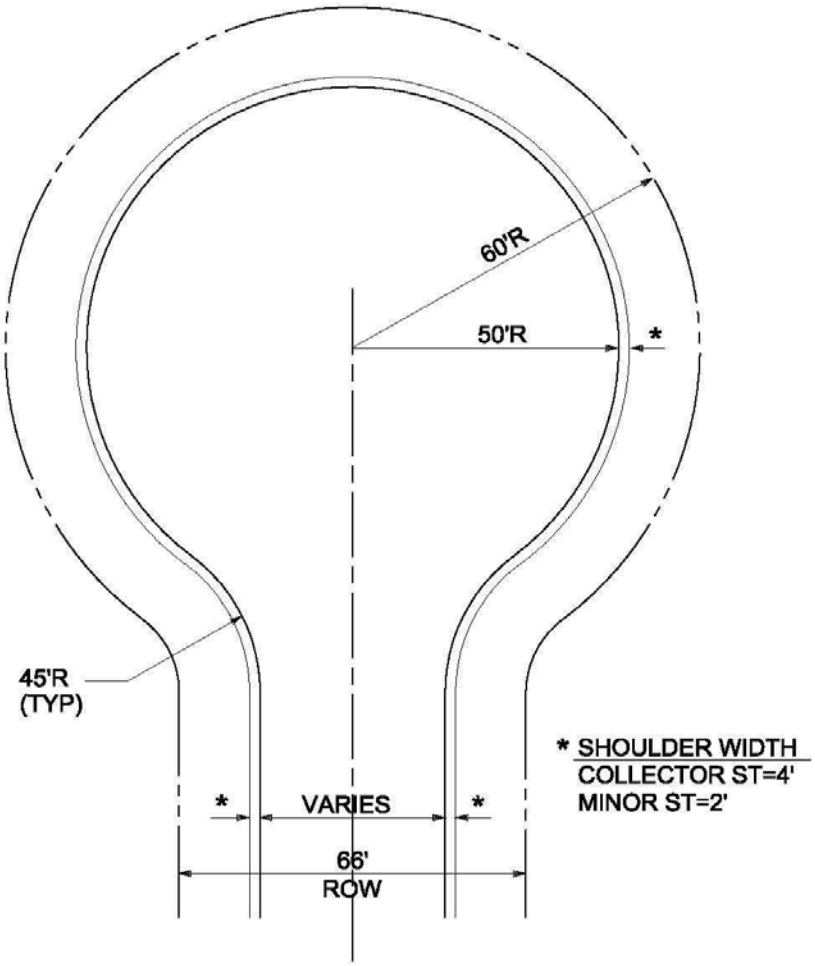

TYPICAL PERMANENT TURN AROUND

Date: June 2009

	City of Columbus STREET STANDARDS	STANDARD DRAWING NO. 104

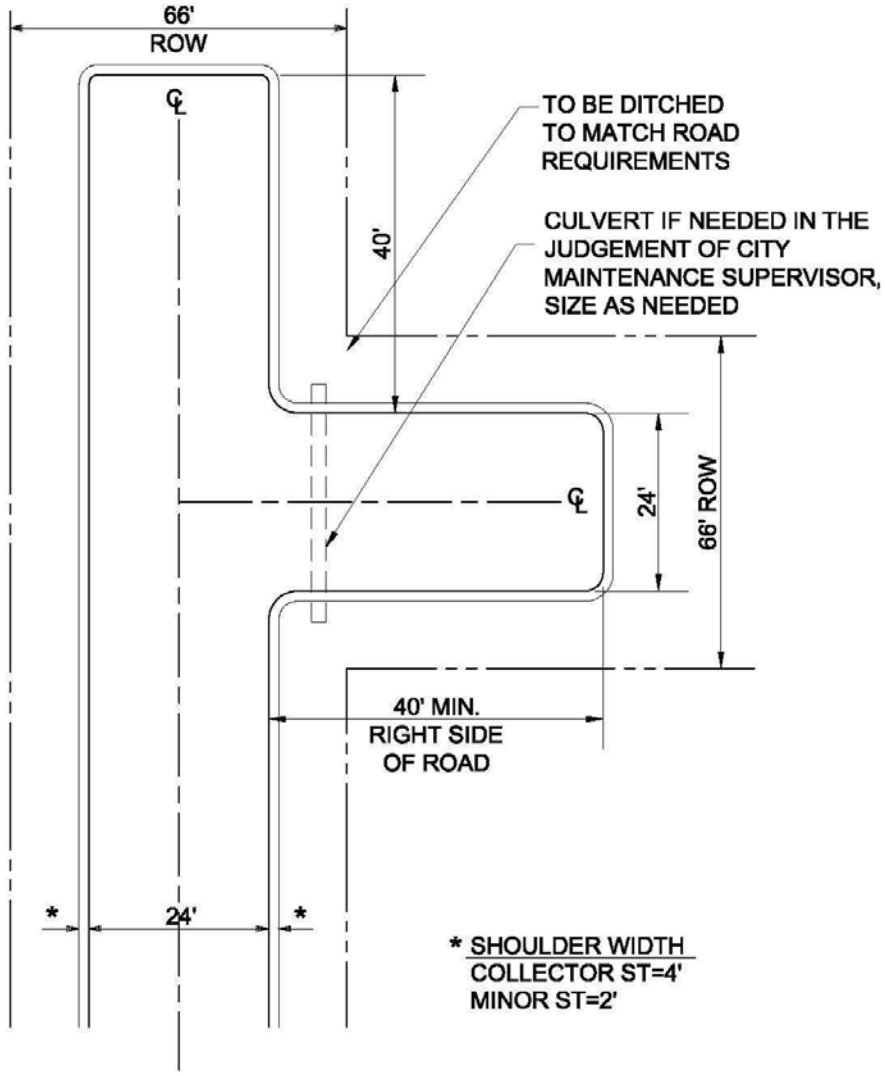

TYPICAL TEMPORARY TURN AROUND

Date: June 2009

	City of Columbus STREET STANDARDS	STANDARD DRAWING NO. 105

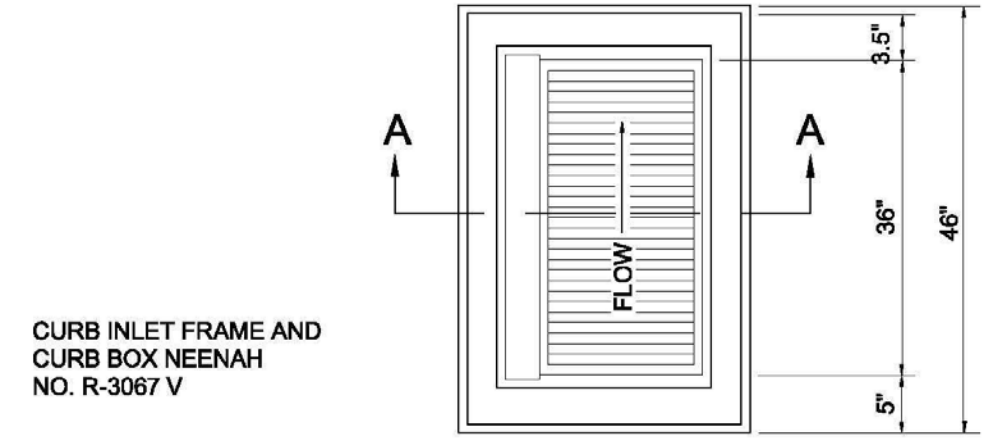

PLAN

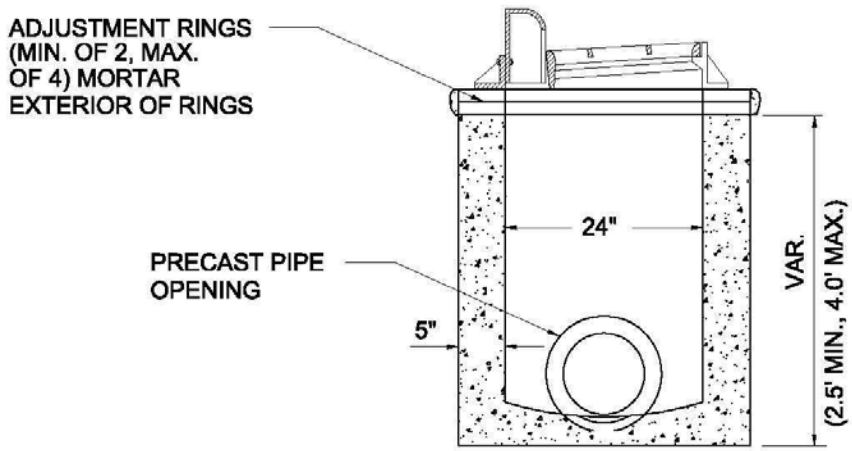

SECTION A-A

PRECAST REINFORCED CONCRETE CATCH BASIN & BASE SLAB
PER ASTM C478

CATCH BASIN, TYPE 404

Date: June 2009

	City of Columbus STREET STANDARDS	STANDARD DRAWING NO. 200 CITY

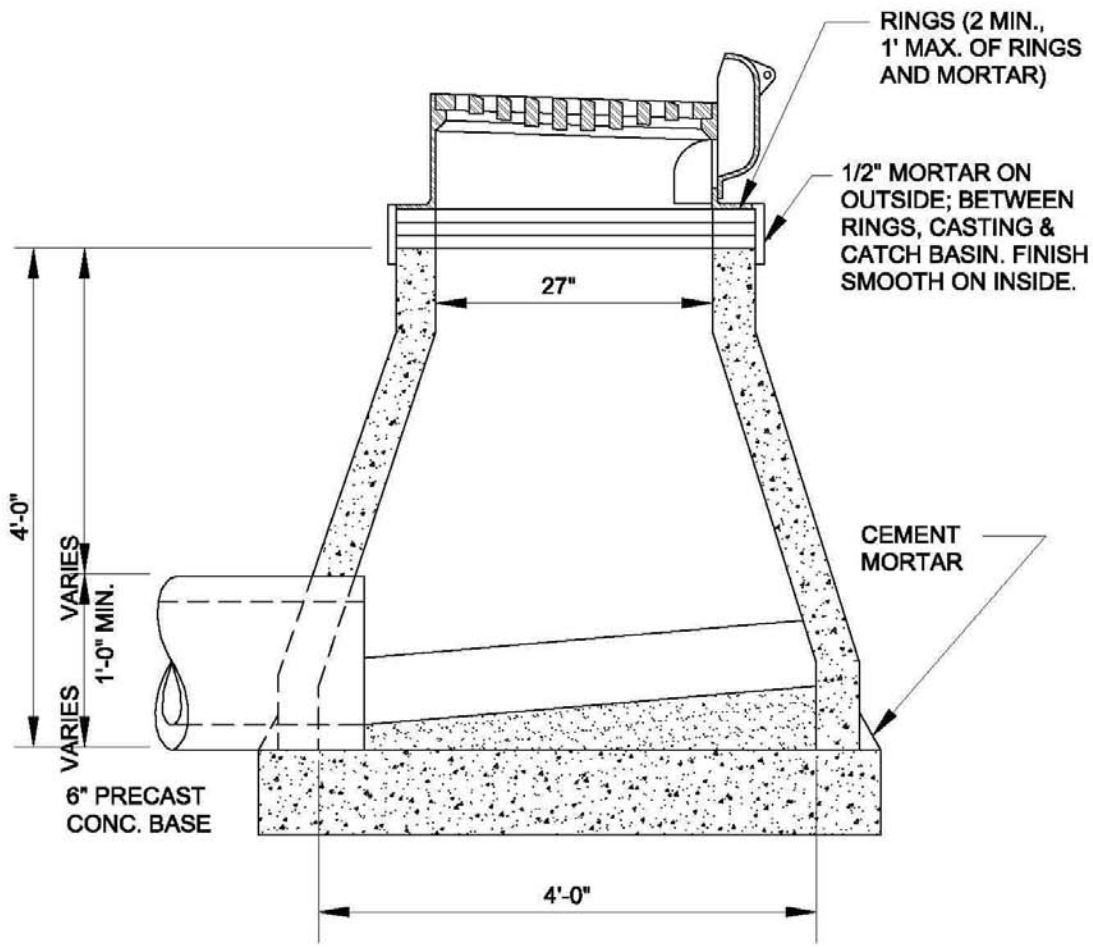

NOTE: NO WOOD SHALL BE USED FOR ADJUSTING CASTING, CEMENT MORTAR ONLY.

CAST IRON CATCH BASIN FRAME & COVER CASTINGS PER SPECIFICATIONS.

PRECAST REINFORCED CONCRETE CONE SECTION & PRECAST BASE PER ASTM C478.

FILL OPENING BETWEEN PIPE AND MANHOLE WALL WITH CEMENT MORTAR.
INSIDE SURFACE SHALL BE FINISHED SMOOTH.

CATCH BASIN, TYPE 402

Date: June 2009

	City of Columbus STREET STANDARDS	STANDARD DRAWING NO. 201 CITY

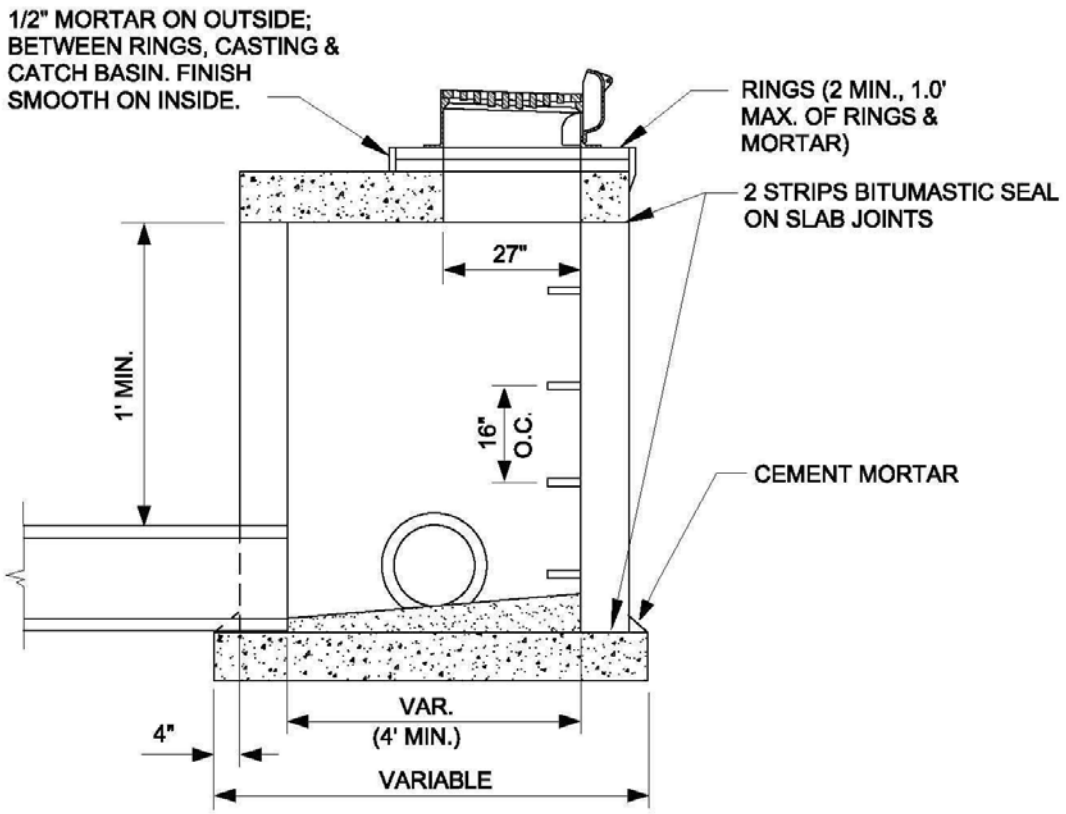

NOTE: NO WOOD SHALL BE USED FOR ADJUSTING CASTING; CEMENT MORTAR ONLY.

CAST IRON FRAME & GRATE CASTINGS PER SPECIFICATIONS.

MANHOLE STEPS SHALL BE CAST IRON, ALUMINUM OR STEEL REINFORCED PLASTIC PER ASTM C478. LOCATION SHALL BE AS NOTED IN THE SPECIFICATIONS.

PRECAST REINFORCED CONCRETE MANHOLE SECTIONS PER ASTM C478, OR 8" CONCRETE MANHOLE BLOCK WITH 1/2" MORTARED EXTERIOR.

PRECAST REINFORCED CONCRETE BASE & COVER SLABS PER ASTM C478,

FURNISH PRECAST MANHOLE SECTIONS WITH O-RING GASKETS & LUBRICANT EXCEPT AS OTHERWISE SPECIFIED.

FILL OPENING BETWEEN PIPE AND MANHOLE WALL WITH CEMENT MORTAR. INSIDE SURFACE SHALL BE FINISHED SMOOTH.

CATCH BASIN/MANHOLE, TYPE 406

Date: June 2009

	City of Columbus STREET STANDARDS	STANDARD DRAWING NO. 202 CITY

1

4834-0679, v.

0023-1